PHYS 301
HOMEWORK #4
Solutions

1. $f(x) = \cos x, \; -1/2 < x < 1/2$

Solution: Our interval has length 1. Since our function is 2 L = 1 periodic, the value of L in this case is 1/2. Since cos is an even function, we know that all the b_n values will be zero, and we can use symmetry to simplify the calculation of a_o and a_n :

$$a_0 = \frac{1}{L}\int_{-L}^{L} f(x)\,dx = \frac{2}{L}\int_0^L \cos x\,dx = 4\int_0^{1/2}\cos x\,dx = 4\sin x\Big|_0^{1/2} = 4\sin(1/2)$$

Using results from earlier assignments :

$$a_n = 4\int_0^{1/2}\cos x\cos(2n\pi x)\,dx = 2\left\{\frac{\sin[(2n\pi - 1)x]}{2n\pi - 1} + \frac{\sin[(2n\pi + 1)x]}{2n\pi + 1}\right\}\Bigg|_0^{1/2}$$

(Our integrand involves the term cos ($n\pi x/L$), since L = 1/2, we will encounter terms of the form cos ($2n\pi x$)). Note that since the argument of sin is $2n\pi$ (and not just 2 n) we cannot automatically set sin equal to zero at both limits. After some trig identities and algebra we get :

$$a_n = \frac{-4(-1)^n \sin(1/2)}{4n^2\pi^2 - 1}$$

Our Fourier Series is then :

$$f(x) = 2\sin(1/2) + 4\sin(1/2)\left[\frac{\cos(2\pi x)}{4\pi^2 - 1} - \frac{\cos(4\pi x)}{16\pi^2 - 1} + \frac{\cos(6\pi x)}{36\pi^2 - 1} - \ldots\right]$$

Verifying through Mathematica :

```
g1 = Plot[2 Sin[1 / 2] + 4 Sin[1 / 2] Sum[- (-1) ^n Cos[2 n π x] / (4 n^2 π^2 - 1), {n, 1, 50}],
   {x, -3 / 2, 3 / 2}];
g2 = Plot[Cos[x], {x, -1 / 2, 1 / 2}, PlotStyle → Green];
Show[g1, g2, PlotRange → All]
```

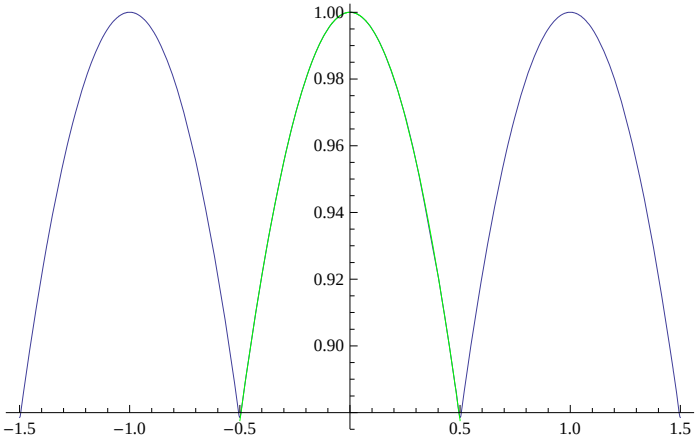

---

2. $f(x) = \begin{cases} -1, & -1 < x < 0 \\ 2, & 0 < x < 2 \end{cases}$

This function is defined on [-1, 2], thus is 2 L = 3 periodic, meaning the value of L we should use is 3/2. The Fourier coefficients become :

$$a_0 = \frac{1}{(3/2)}\left[\int_{-1}^{0} -1\,dx + \int_{0}^{2} 2\,dx\right] = 2$$

$$a_n = \frac{1}{(3/2)}\left[\int_{-1}^{0} -\cos(2\,n\,\pi\,x/3)\,dx + 2\int_{0}^{2} \cos(2\,n\,\pi\,x/3)\,dx\right] =$$

$$\frac{2}{3}\left[\frac{-3}{2\,n\,\pi}\sin(2\,n\,\pi\,x/3)\Big|_{-1}^{0} + \frac{3}{n\,\pi}\sin(2\,n\,\pi\,x/3)\Big|_{0}^{2}\right] =$$

$$\frac{2}{3}\left[\frac{-3}{2\,n\,\pi}(0 - \sin(-2\,n\,\pi/3)) + \frac{2}{n\,\pi}\sin(4\,n\,\pi/3)\right] =$$

$$[-\sin(2\,n\,\pi/3) + 2\sin(4\,n\,\pi/3)]/(n\,\pi)$$

Evaluating the first three non - zero coefficients for our Fourier expansion :

$$a_1 = \frac{1}{\pi}(2\sin(4\pi/3) - \sin(2\pi/3)) = \frac{1}{\pi}\left(2\cdot\left(-\frac{\sqrt{3}}{2}\right) - \frac{\sqrt{3}}{2}\right) = -\frac{3\sqrt{3}}{2\pi}$$

$$a_2 = \frac{1}{2\pi}(2\sin(8\pi/3) - \sin(4\pi/3)) = \frac{1}{2\pi}\left(2\frac{\sqrt{3}}{2} - \left(\frac{-\sqrt{3}}{2}\right)\right) = 3\frac{\sqrt{3}}{4\pi}$$

$$a_3 = \frac{1}{3\pi}(2\sin(4\pi) - \sin(2\pi)) = 0$$

$$a_4 = \frac{1}{4\pi}(2\sin(16\pi/3) - \sin(8\pi/3)) = \frac{-3\sqrt{3}}{8\pi}$$

$$b_n = \frac{1}{(3/2)}\left[\int_{-1}^{0} -\sin(2n\pi x/3)\,dx + 2\int_{0}^{2}\sin(2n\pi x/3)\,dx\right] =$$

$$\frac{2}{3}\left[\frac{3}{2n\pi}\cos(2n\pi x/3)\Big|_{-1}^{0} - \frac{3}{n\pi}\cos(2n\pi x/3)\Big|_{0}^{2}\right] =$$

$$\frac{2}{3}\left[\frac{3}{2n\pi}(1-\cos(2n\pi/3)) - \frac{3}{n\pi}(\cos(4n\pi/3)-1)\right] =$$

$$\frac{(1-\cos(2n\pi/3))}{n\pi} + \frac{2(1-\cos(4n\pi/3))}{n\pi} \tag{1}$$

We will use this expression to evaluate the first three non - zero coefficients :

$$b_1 = \frac{1}{\pi}(3-\cos(2\pi/3)-2\cos(4\pi/3)) = \frac{1}{\pi}(3-(-1/2)-2(-1/2)) = \frac{9}{2\pi}$$

$$b_2 = \frac{1}{2\pi}(3-\cos(4\pi/3)-2\cos(8\pi/3)) = \frac{1}{2\pi}(3-(-1/2)-2(-1/2)) = \frac{9}{4\pi}$$

$$b_3 = \frac{1}{3\pi}(3-\cos(2\pi)-2\cos(12\pi)) = 0$$

$$b_4 = \frac{1}{4\pi}(3-\cos(8\pi/3)-2\cos(16\pi/3)) = \frac{1}{4\pi}(3-(-1/2)-2(-1/2)) = \frac{9}{8\pi}$$

Now we can leave the coefficients in the form of eq. (1); this is perfectly acceptable albeit a bit klunky, but perhaps not surprising considering the asymmetric nature of the function. However, if you checked your integral via Mathematica, you likely obtained :

```
Clear[f, l]
l = 3 / 2;
f = Which[-1 < x < 0, -1, 0 < x < 2, 2];
(* Notice how we can use the Which function to define piecewise functions *)
(1 / l) Integrate[f Sin[n π x / l], {x, -1, 2}]
```

$$\frac{2\left(\text{Sin}\left[\frac{n\pi}{3}\right]^2 + 2\,\text{Sin}\left[\frac{2n\pi}{3}\right]^2\right)}{n\pi}$$

We can reconcile the two answers using simple trig identities. Combine the double cos formula with the trig version of the Pythagorean theorem and we get :

$$\cos 2x = \cos^2 - \sin^2 x = 1 - 2\sin^2 x \Rightarrow 1-\cos 2x = 2\sin^2 x$$

Thus :

$$\frac{(1-\cos(2n\pi/3))}{n\pi} + \frac{2(1-\cos(4n\pi/3))}{n\pi} = \frac{2}{n\pi}\left[\sin(n\pi/3)^2 + 2\sin(2n\pi/3)^2\right]$$

Now, with all this at our disposal, the Fourier expansion becomes :

$$f(x) = 1 - \frac{3\sqrt{3}}{2\pi}\left[\cos(2\pi x/3) - \frac{\cos(4\pi x/3)}{2} + \frac{\cos(8\pi x/3)}{4} + \ldots\right] + \frac{9}{2\pi}\left[\sin(2\pi x/3) + \frac{\sin(4\pi x/3)}{2} + \frac{\sin(8\pi x/3)}{4} + \ldots\right]$$

Finally, to verify via Mathematica :

```
Clear[a0, an, bn]
a0 = 2;
an = (-Sin[2 n π / 3] + 2 Sin[4 n π / 3]) / (n π);
bn = 2 (Sin[n π / 3]^2 + 2 Sin[2 n π / 3]^2) / (n π);
Plot[a0 / 2 + Sum[an Cos[2 n π x / 3] + bn Sin[2 n π x / 3], {n, 1, 50}], {x, -4, 5}]
```

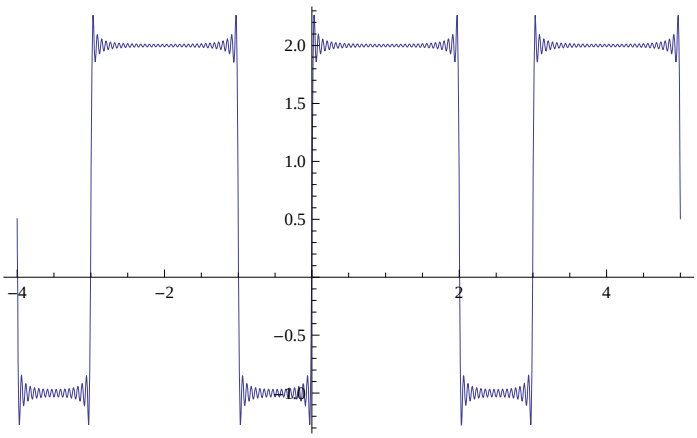

And it' s a match. And you thought we couldn' t expand this function in a Fourier Series. Ye of little faith ...

---

3. $f(x) = \begin{cases} -1, & -4 < x < 0 \\ 1, & 0 < x < 4 \end{cases}$

This is going to be easy. We should be able to determine by inspection that this is an odd function, but since I have Mathematica (literally) at my fingertips, let' s :

```
Clear[f, l]
l = 4;
f = Which[-4 < x < 0, -1, 0 < x < 4, 1];
Plot[f, {x, -l, l}]
```

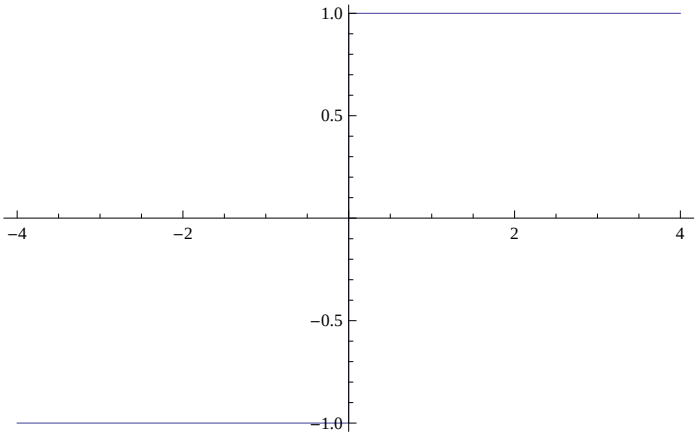

Thus we know there will be only sin terms in this expansion, and we can compute :

$$b_n = \frac{1}{4}\int_{-4}^{4} f(x)\sin(n\pi x/4)\,dx = \frac{2}{4}\int_{0}^{4} f(x)\sin(n\pi x/4)\,dx =$$

$$\frac{1}{2}\int_{0}^{4}\sin(n\pi x/4)\,dx = \frac{1}{2}\left[\frac{-4}{n\pi}\cos(n\pi x/4)\Big|_0^4\right] = \frac{2}{n\pi}(1-\cos(n\pi)) = \begin{cases} 0, & n \text{ even} \\ \frac{4}{n\pi}, & n \text{ odd} \end{cases}$$

The Fourier series is :

$$f(x) = \frac{4}{\pi}\left[\sin(\pi x/4) + \frac{\sin(3\pi x/4)}{3} + \frac{\sin(5\pi x/4)}{5} + \ldots\right]$$

Verifying :

```
Plot[(4 / π) Sum[Sin[n π x / 4] / n, {n, 1, 101, 2}], {x, -12, 12}]
```

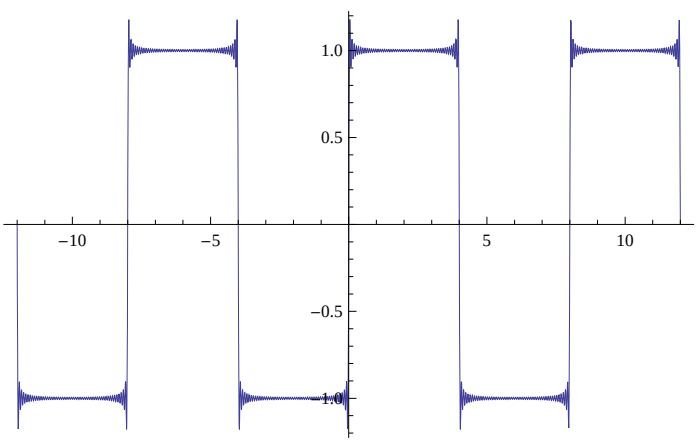

---

4. $f(x) = \begin{cases} 1+2x, & -2 < x < 0 \\ 1-2x, & 0 < x < 2 \end{cases}$

We should be able to see that this is an even function, but plotting removes all ambiguity :

```
Plot[Which[-2 < x < 0, 1 + 2 x, 0 < x < 2, 1 - 2 x], {x, -2, 2}]
```

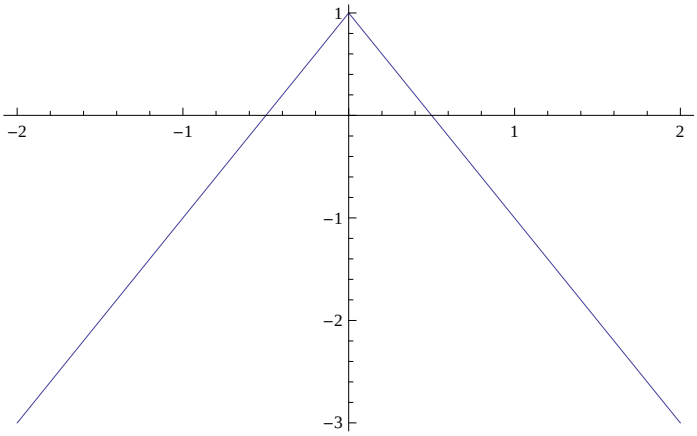

Thus, there will be no sin terms in this expansion, and we can compute coefficients according to :

$$a_0 = \frac{2}{2}\int_0^2 (1-2x)\,dx = -2$$

$$a_n = \frac{2}{2}\int_0^2 (1-2x)\cos(n\pi x/2)\,dx = \frac{2}{n\pi}\sin[n\pi x/2]\Big|_0^2 - \frac{1}{n\pi}\cdot 4x\sin[n\pi x/2]\Big|_0^2 -$$

$$\frac{8}{n^2\pi^2}\cos[n\pi x/2]\Big|_0^2 = \frac{8}{n^2\pi^2}(1-(-1)^n) = \begin{cases} \frac{16}{n^2\pi^2}, & n \text{ odd} \\ 0, & n \text{ even} \end{cases}$$

Our Fourier series is :

$$f(x) = -1 + \frac{16}{\pi^2}\left[\cos(\pi x/2) + \frac{\cos(3\pi x/2)}{3^2} + \frac{\cos(5\pi x/2)}{5^2} + \ldots\right]$$

Verifying :

```
g1 = Plot[-1 + (16 / π^2) Sum[Cos[n π x / 2] / n^2, {n, 1, 101, 2}], {x, -6, 6}];
g2 = Plot[Which[-2 < x < 0, 1 + 2 x, 0 < x < 2, 1 - 2 x], {x, -2, 2}, PlotStyle → Red];
Show[g1, g2]
```

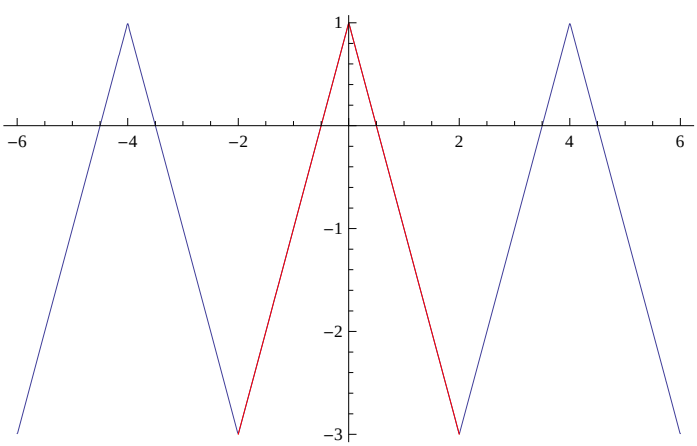

5. $f(x) = e^{-2x}, \; -2 < x < 2$

In this problem, L = 2. The forms of the integrals are well known by now :

$$a_0 = \frac{1}{2}\int_{-2}^{2} e^{-2x}\,dx = \frac{\sinh(4)}{2}$$

We can evaluate the a and b integrals using the results derived in class :

$$\left\{\int e^{ax}\cos bx\,dx,\ \int e^{ax}\sin bx\,dx\right\} = \frac{e^{ax}}{a^2+b^2}\{a\cos(bx)+b\sin(bx),\ -b\cos(bx)+a\sin(bx)\}$$

In our integrals, a = -2 and b = n π/2, therefore :

$$a_n = \frac{1}{2}\int_{-2}^{2}\cos(n\pi x/2)\,e^{-2x}\,dx = \frac{e^{-2x}}{16+n^2\pi^2}\left(-4\cos(n\pi x/2)+n\pi\sin(n\pi x/2)\right)\Big|_{-2}^{2}$$

The sin terms will go to zero, leaving us with :

$$a_n = \frac{-4}{16+n^2\pi^2}\left(e^{-4}\cos(n\pi) - e^{4}\cos(-n\pi)\right) = \frac{4(-1)^n\left(e^4-e^{-4}\right)}{16+n^2\pi^2} = \frac{8(-1)^n\sinh(4)}{16+n^2\pi^2}$$

For the sin coefficients :

$$b_n = \frac{1}{2}\int_{-2}^{2}\sin(n\pi x/2)\,e^{-2x}\,dx = \frac{e^{-2x}}{16+n^2\pi^2}\left(-n\pi\cos(n\pi x/2)-4\sin(n\pi x/2)\right)\Big|_{-2}^{2}$$

The sin terms are zero when evalauted at x = 2 and - 2, leaving us with :

$$b_n = \frac{-n\pi}{16+n^2\pi^2}\left(e^{-4}\cos(n\pi)-e^{4}\cos(n\pi)\right) = \frac{2\sinh(4)\,n\pi(-1)^n}{16+n^2\pi^2}$$

We can write the Fourier series as :

$$f(x) = \frac{\sinh(4)}{4} - 8\sinh(4)\left[\frac{\cos(\pi x/2)}{16+\pi^2} - \frac{\cos(2\pi x/2)}{16+4\pi^2} + \frac{\cos(3\pi x/2)}{16+9\pi^2} - \ldots\right]$$

$$-2\pi\sinh(4)\left[\frac{\sin(\pi x/2)}{16+\pi^2} - \frac{2\sin(2\pi x/2)}{16+4\pi^2} + \frac{3\sin(3\pi x/2)}{16+9\pi^2} - \ldots\right]$$

Verifying :

```
Clear[a0, an, bn]
a0 = Sinh[4] / 2;
an = 8 (-1)^n Sinh[4] / (16 + n^2 π^2);
bn = 2 Sinh[4] n π (-1)^n / (16 + n^2 π^2);
g1 =
  Plot[a0 / 2 + Sum[an Cos[n π x / 2] + bn Sin[n π x / 2], {n, 1, 50}], {x, -6, 6}, PlotRange → All];
g2 = Plot[Exp[-2 x], {x, -2, 2}, PlotStyle → Red, PlotRange → All];
Show[g1, g2, PlotRange → All]
```